关注万威
WINWAY

西安万威机械制造股份有限公司

地址：陕西省西安市高新区丈八五路2号现代企业中心
东区工业厂房1栋1层
邮政编码：710075
电话：+86-29-87814108
传真：+86-29-87814667
官网：www.xawinway.com
在线销售平台：www.xawinway.net

XI' AN WINWAY MACHINERY CO.,LTD.

Add:Building1,East Industrial plant of the Modern Enterprise Center, No 2,ZhangBaWu Road,High-tech Development Zone, Xi' an , Shaanxi Province.
Post code: 710075
Tel:+86-29-87814108
Fax:+86-29-87814667
Offical website:www.xawinway.com
Online sales:www.xawinway.net

深孔加工
Deep Hole Boring

可调机夹浮动镗刀
Adjustable Machine Clip Floating Boring Cutter

万威®
西安万威机械制造股份有限公司
XI' AN WINWAY MACHINERY CO.,LTD.

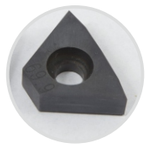

西安万威机械制造股份有限公司

XI' AN WINWAY MACHINERY CO.,LTD.

03 公司简介
Brief Introduction

05 可调机夹浮动镗刀产品概览
Adjustable Machine Clip Floating Boring Cutter from Winway

07 浮动镗刀夹
Floating Boring Cartridge

09 浮动镗刀头
Floating Boring Cutter Head

11 钻镗杆
Drilling & Boring Bar

13 浮动镗刀全套
Set of Floating Boring Cutter

14 浮动镗刀片
Inserts for Floating Boring Cutter

15 可调机夹浮动镗刀
Adjustable Machine Clip Floating Boring Cutter

适用范围 15
Application

切削用量的选用 15
Selection of Cutting Parameter

切削速度Vc推荐表 15
Vc Recommendation List

加工效果 16
Processing Result

刀具寿命 16
Life service

非标定制 16
For cutters to be customized

加工状态示意图 16
Processing State Diagram

加工案例 17
Manufacture Instance

实物照片 17
Physical Photos

西安万威机械制造股份有限公司成立于2001年（证券简称：万威制造；证券代码：836719），总部位于中国陕西省西安市高新技术开发区，是一家集刀具研发、设计、制造、销售、修磨、检测，到刀具应用服务、机床配刀交钥匙服务、生产效率提升服务、机械加工技术咨询服务为一体的综合性刀具企业。长期为航空航天、汽车制造、能源发电、石油钻探、模具加工、通用机械、电子通讯等行业提供解决方案，尤其在航空动力领域，万威拥有丰富的经验。

万威制造的反应速度快，解决方案能力强，长期坚持规范经营，拥有良好的口碑，是值得您信赖的刀具供应商及服务商。

Xi'an Winway Machinery Co., Ltd is founded in 2001 (Stock symbol : WINWAY Machinery Stock No.: 836719) , with head office located in Xi' an Hi-tech development zone, Shaanxi Province, China. It' s an integrated enterprise for tools R&D, design, manufacturing, sales, regrinding, test as well as kinds of services including tools application, tools turnkey, production efficiency improvement solution and machining technology consultancy. We provide solutions for industries such as aerospace, car manufacturing, power generation, oil drilling, mould processing, general machinery, electro communication, etc for long term. WINWAY owns rich experiences especially in aero-engine filed.

WINWAY products win high reputation for quick response, high solution capability and our standardized operation. It' s your trustworthy tools and service provider.

专业的刀具应用技术服务团队

——拥有丰富的刀具应用技术经验，及解决疑难加工问题的综合技术能力。

——为机械加工的提升效率、降低成本提供专业的整体解决方案。

Professional service group for tools application technology

——Rich tools application experience and integrated technological capability in solving difficult processing problems.

——Provide total solution to improving processing efficiency and reducing cost.

技术全面的交钥匙项目工程师队伍

——为您提供整条生产线的完整机械加工解决方案及现场交钥匙服务。

——为您的新产品研发提供工装、刀具、工艺以及加工程序的支持。

Turnkey project engineers armed with comprehensive technologies

——Provide you a set of processing solution for production line and on-site turnkey service.

——Provide you support for fixture, cutting tools, processing and NC program for new product.

快速的非标刀具设计制造系统

——万威制造工厂可以快速为您提供高等级的非标刀具。

——万威制造工厂也可承担复杂、精密零件的加工，及新产品的科研试制。

Rapid customized tools design and manufacture system

——WINWAY can rapidly provide you the high level customized tools.

——WINWAY not only produce complex and precise parts, but also try for research on new products.

核心业务》

生产效率提升与工艺解决方案

Core business》

Production efficiency improvement and processing solution

主营产品》

车刀、铣刀、钻头、铰刀、丝锥、镗刀、U钻、深孔钻、锪钻、刀片、套车刀、锯片刀、扩孔刀、抗振杆、刀柄系统、飞机装配工具、对刀仪、测刀仪、磨刀机等

Main products》

Turning tools, end mills, drill bits, reamers, taps, boring tools, U drills, deep hole drills, counter bits, inserts, outside boing tools, saws, cornish bits, anti vibration bar, tool holder, aircraft assembly tools, tool setting gauge, measuring instrument, grinding machine etc.

正直、积极、负责、勇敢、友爱、具有创新精神的万威人秉承万威的经营理念不断提升企业核心竞争力，为机械制造企业服务。

Adhering to business philosophy, staff of WINWAY enhance core competencies with fair-minded, active, responsible, courageous, amiable and creative spirits, so as to provide service for manufacturers.

我们倾听您的问题和意见

We listen to your problems and advice

我们关注您的需求和期望

We are concerned about your demand and expectation

我们助力您的发展和成功

We facilitate your development and success

国家级高新技术企业
The national high and new technology enterprises

质量体系ISO9001：2015
quality system ISO9001:2015

可调机夹浮动镗刀

Adjustable Machine Clip Floating Boring Cutter from Winway

产品特性

——使用方便、灵活
——孔加工表面质量高
——切削性能稳定
——刀片寿命长
——深孔加工成本低

Characteristies

——Easy & flexible usage
——High quality hole surface
——Stable cutting performance
——Long life time of inserts
——Low cost for deep hole processing

浮动镗刀夹

选用优质工具钢，经热处理，保证刀夹即耐用又防止变形，刀夹内腔精密配合，防止切削时的摆动，提高切削的稳定性，可获得较高的尺寸精度、理想的表面粗糙度。

Floating Boring Cutter

Heat treatment for selected advanced steel for purpose of durable service or deformed. Fine connection inside cartridge to avoid moving during cutting so as to reach stable cutting, higher dimension precision and ideal roughness.

浮动镗刀的改进 | Alternation of Boring Cutter

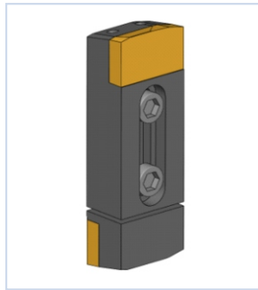

第一代（焊接式）
I Generation(Welding Type)

第二代（机夹式）
II Generation (Clamping Type)

第三代（刀片刃形为圆弧形）
III Generation (Circular Arc Inserts)

刀片 | Cutting Insert

采用优质超细颗粒硬质合金，刀片有涂层和不涂层两种。

Adopting advanced superior micro-grain carbide substrate, which including coating and no coating types.

浮动镗刀头 | Floating Boring Cutter Head

——浮动镗刀头的刀夹槽设计与制造精密，能确保镗刀在槽内平稳滑动，同时自动定心。
——在镗刀头的外周设有数条分布合理、材质耐磨、韧性好的导向条，可使导向部外径始终紧贴在已加工工件表面，确保镗刀切削更加平稳。
——浮动镗刀头设有内冷系统，保证了加工孔的高精度、高直线度和理想的内孔表面粗糙度。

—Fine design and manufacture of cartridge pocket to ensure stable moving of boring cutter inside pocket, meanwhile self centering.

—Several uniform distributed, guide bars which are made of wearable and flexable material, force the bars' out surface firmly clamped on workpiece to ensure stable cutting.

—Internal cooling of floating boring cutter head ensure high precision, straightness and ideal roughness inside hole.

钻镗杆 | Drilling & Boring Bar

钻镗杆采用优质合金工具钢，经过长期时效处理、淬硬后加工而成，确保经久耐用。

By adopting advanced alloy tool steel, drilling & boring bars come into being by long time aging treatment and after hardened, so as to ensure long term and durable use.

螺钉 | Screw

均采用进口螺钉，刀片压紧更稳固，质量可靠，经久耐用。

Imported screw and firmly inserts pressing, causing reliable quality, durable service.

浮动镗刀夹 Floating Boring Cartridge

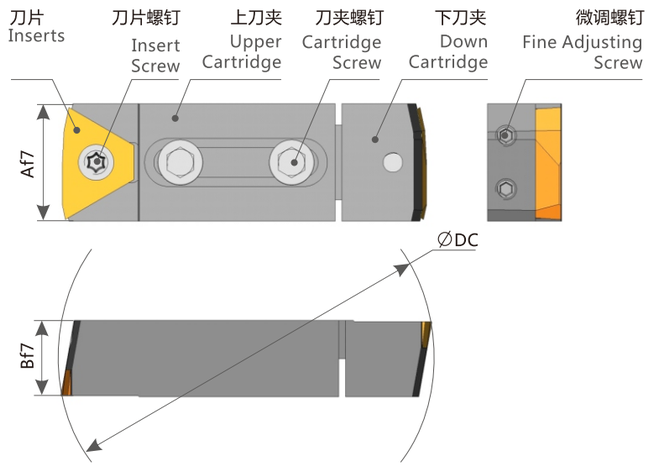

浮动镗刀夹 规格清单 Floating Boring Cartridge Specification List

被加工孔径 Cutting Hole Dia.	型号 Cutter No.	尺寸 Dimension (mm)	
		A	B
35-36	FBT14223536	22f7	14f7
36-37	FBT14223637		
37-38	FBT14223738		
38-39	FBT14223839		
39-40	FBT14223940		
40-42	FBT14224042		
42-44	FBT14224244		
44-46	FBT14224446		
46-48	FBT14224648		
48-50	FBT14224850		
50-53	FBT14225053		
53-56	FBT14225356		
56-59	FBT14225659		
59-62	FBT14225962		
62-65	FBT14226265		
65-68	FBT14226568		
68-71	FBT14226871		
71-74	FBT14227174		
74-77	FBT14227477		
77-80	FBT14227780		

深孔加工 Deep Hole Boring

浮动镗刀夹 Floating Boring Cartridge

浮动镗刀夹 规格清单 Floating Boring Cartridge Specification List

被加工孔径 Cutting Hole Dia.	型号 Cutter No.	尺寸 Dimension (mm)	
		A	B
80-84	FBT20308084	30f7	20f7
84-88	FBT20308488		
88-92	FBT20308892		
92-96	FBT20309296		
96-100	FBT203096100		
100-105	FBT2030100105		
105-110	FBT2030105110		
110-115	FBT2030110115		
115-120	FBT2030115120		
120-125	FBT2036120125	36f7	20f7
125-130	FBT2036125130		
130-135	FBT2036130135		
135-140	FBT2036135140		
140-145	FBT2036140145		
145-150	FBT2036145150		
150-155	FBT2036150155		
155-160	FBT2036155160		
160-165	FBT2240160165	40f7	22f7
165-170	FBT2240165170		
170-175	FBT2240170175		
175-180	FBT2240175180		
180-185	FBT2240180185		
185-190	FBT2240185190		
190-195	FBT2240190195		
195-200	FBT2240195200		

浮动镗刀夹备件 Accessories for Floating Boring Cartridge

刀片规格 Insert No.	刀片螺钉 Insert Screw
XPEA3536-XPEA4648	ST3511-60A
XPEA4850-XPEA195200	ST4510-60

刀夹规格 Cartridge No.	刀夹螺钉 Cartridge Screw	微调螺钉 Fine Adjusting Screw
FBT14223536-FBT14227780	L64013	D84010
FBT20308084-FBT2030115120	L65013	D84010
FBT2036120125-FBT2036155160	L66018	D85015
FBT2240160165-FBT2240195200	L66018	D85015

浮动镗刀头 Floating Boring Cutter Head

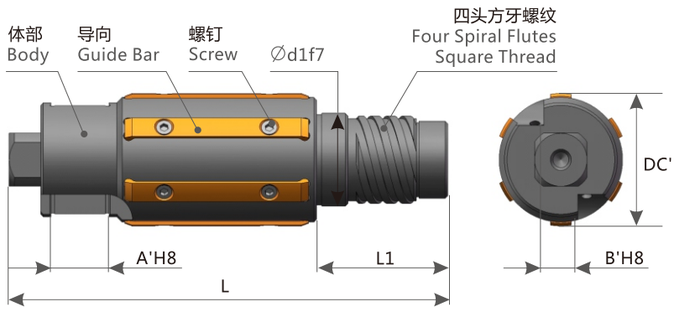

DC — 镗刀直径 Boring cutter Dia.
DC' — 导向条直径 Guide bar Dia.

公式：
$DC' = DC^{+0.06}_{+0.04}$

浮动镗刀头 规格清单 Floating Boring Cutter Head Specification List

被加工孔径 Cutting Hole Dia.	型号 Cutter No.	尺寸 Dimension (mm)				
		A'	B'	d1	L	L1
35-36	FBU3536	22H8	14H8	27	155	33
36-37	FBU3637			29	170	40
37-38	FBU3738			29	170	40
38-39	FBU3839			29	170	40
39-40	FBU3940			32	170	40
40-42	FBU4042			32	170	40
42-44	FBU4244			32	170	40
44-46	FBU4446			35	170	40
46-48	FBU4648			35	170	40
48-50	FBU4850			38	170	40
50-53	FBU5053			38	170	40
53-56	FBU5356			42	175	44
56-59	FBU5659			46	175	44
59-62	FBU5962			50	175	44
62-65	FBU6265			50	175	44
65-68	FBU6568			50	175	44
68-71	FBU6871			50	175	44
71-74	FBU7174			50	175	44
74-77	FBU7477			62	185	55
77-80	FBU7780			62	185	55

深孔加工 Deep Hole Boring

浮动镗刀头 Floating Boring Cutter Head

浮动镗刀头 规格清单 Floating Boring Cutter Head Specification List

被加工孔径 Cutting Hole Dia.	型号 Cutter No.	尺寸 Dimension (mm)				
		A'	B'	d1	L	L1
80-84	FBU8084	30H8	20H8	69	205	65
84-88	FBU8488			74	205	65
88-92	FBU8892			74	205	65
92-96	FBU9296			74	205	65
96-100	FBU96100			85	210	70
100-105	FBU100105			85	210	70
105-110	FBU105110			85	210	70
110-115	FBU110115			97	210	70
115-120	FBU115120			97	210	70
120-125	FBU120125	36H8	20H8	97	228	80
125-130	FBU125130			97	228	80
130-135	FBU130135			定制 Depending on actual situation	定制 Depending on actual situation	定制 Depending on actual situation
135-140	FBU135140					
140-145	FBU140145					
145-150	FBU145150					
150-155	FBU150155					
155-160	FBU155160					
160-165	FBU160165	40H8	22H8			
165-170	FBU165170					
170-175	FBU170175					
175-180	FBU175180					
180-185	FBU180185					
185-190	FBU185190					
190-195	FBU190195					
195-200	FBU195200					

钻镗杆 Drilling & Boring Bar

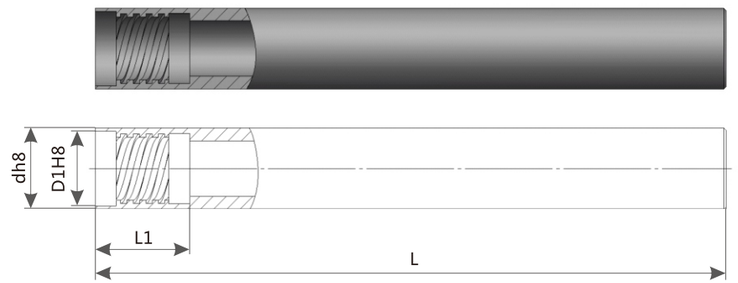

钻镗杆 规格清单 Drilling & Boring Bar Specification List

被加工孔径 Cutting Hole Dia.	型号 Cutter No.	尺寸 Dimension (mm)			
		d	D1	L1	L
35-36	BER3536-L	30	27	35	标准长度 800/1200/ 1800/2500
36-37	BER3637-L	32	29	42	
37-38	BER3738-L	32	29	42	
38-39	BER3839-L	32	29	42	
39-40	BER3940-L	35	32	42	
40-42	BER4042-L	35	32	42	
42-44	BER4244-L	35	32	42	
44-46	BER4446-L	38	35	42	
46-48	BER4648-L	38	35	42	
48-50	BER4850-L	43	38	42	
50-53	BER5053-L	43	38	42	
53-56	BER5356-L	46	42	46	
56-59	BER5659-L	50	46	46	
59-62	BER5962-L	56	50	46	
62-65	BER6265-L	56	50	46	
65-68	BER6568-L	56	50	46	
68-71	BER6871-L	56	50	46	
71-74	BER7174-L	56	50	46	
74-77	BER7477-L	68	62	57	
77-80	BER7780-L	68	62	57	
80-84	BER8084-L	75	69	67	
84-88	BER8488-L	80	74	67	
88-92	BER8892-L	80	74	67	
92-96	BER9296-L	80	74	67	
96-100	BER96100-L	92	85	72	
100-105	BER100105-L	92	85	72	

深孔加工 Deep Hole Boring

钻镗杆 Drilling & Boring Bar

钻镗杆 规格清单 Drilling & Boring Bar Specification List

被加工孔径 Cutting Hole Dia.	型号 Cutter No.	尺寸 Dimension (mm)			
		d	D1	L1	L
105-110	BER105110-L	92	85	72	标准长度 800/1200/ 1800/2500
110-115	BER110115-L	105	97	72	
115-120	BER115120-L	105	97	72	
120-125	BER120125-L	105	97	82	
125-130	BER125130-L	105	97	82	
130-135	BER130135-L	定制 Can be customized	定制 Can be customized	定制 Can be customized	
135-140	BER135140-L				
140-145	BER140145-L				
145-150	BER145150-L				
150-155	BER150155-L				
155-160	BER155160-L				
160-165	BER160165-L				
165-170	BER165170-L				
170-175	BER170175-L				
175-180	BER175180-L				
180-185	BER180185-L				
185-190	BER185190-L				
190-195	BER190195-L				
195-200	BER195200-L				

例：被加工孔径为40-42，所需刀杆长度为800mm，订购型号为：BER4042-800

For example: If cutting hole Dia. is between 40-42, the cutter length is 800mm, then the ordering number will be BER4042-800.

钻杆 规格清单 Drilling Bar Specification List

只与机夹深孔钻头配套用 Only for matched deep hole drill bit

被加工孔径 Cutting Hole Dia.	型号 Cutter No.	尺寸 Dimension (mm)			
		d	D1	L1	L
30-32	BER3032-L	27	24	35	标准长度 800/1200/ 1800/2500
32-35	BER3235-L	20	25	35	

浮动镗刀全套 Set of Floating Boring Cutter

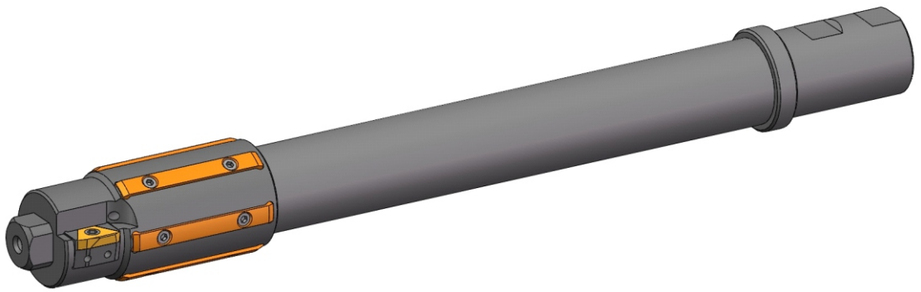

浮动镗刀全套 规格清单（不含刀片）
Set of Floating Boring Cutter Specification List (Exclude inserts)

被加工孔径 Cutting Hole Dia.	型号 Cutter No.
35-36	FBT14223536-S
36-37	FBT14223637-S
37-38	FBT14223738-S
38-39	FBT14223839-S
39-40	FBT14223940-S
40-42	FBT14224042-S
42-44	FBT14224244-S
44-46	FBT14224446-S
46-48	FBT14224648-S
48-50	FBT14224850-S
50-53	FBT14225053-S
53-56	FBT14225356-S
56-59	FBT14225659-S
59-62	FBT14225962-S
62-65	FBT14226265-S
65-68	FBT14226568-S
68-71	FBT14226871-S
71-74	FBT14227174-S
74-77	FBT14227477-S
77-80	FBT14227780-S
80-84	FBT20308084-S
84-88	FBT20308488-S
88-92	FBT20308892-S

被加工孔径 Cutting Hole Dia.	型号 Cutter No.
92-96	FBT20309296-S
96-100	FBT203096100-S
100-105	FBT2030100105-S
105-110	FBT2030105110-S
110-115	FBT2030110115-S
115-120	FBT2030115120-S
120-125	FBT2036120125-S
125-130	FBT2036125130-S
130-135	FBT2036130135-S
135-140	FBT2036135140-S
140-145	FBT2036140145-S
145-150	FBT2036145150-S
150-155	FBT2036150155-S
155-160	FBT2036155160-S
160-165	FBT2240160165-S
165-170	FBT2240165170-S
170-175	FBT2240170175-S
175-180	FBT2240175180-S
180-185	FBT2240180185-S
185-190	FBT2240185190-S
190-195	FBT2240190195-S
195-200	FBT2240195200-S

浮动镗刀片 Inserts for Floating Boring Cutter

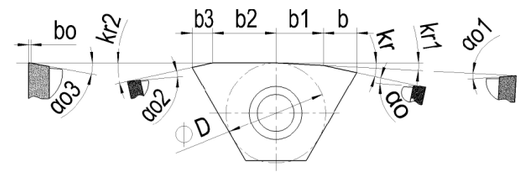

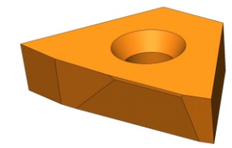

Kr — 主偏角
Kr1 — 过度刃偏角
Kr2 — 副偏角
b — 主偏角长度
bo — 圆柱刃带
b1 — 过度刃偏角长度
b2 — 校准刃长度
b3 — 副偏角长度
αo、αo1、αo2、αo3 — 各刃部后角

Kr — Positive Angle: for main cutting
Kr1 — Transition Edge Angle of Avertence: for purpose of modified and ironing
Kr2 — End Cutting Edge Angle: avoid scratch on workpiece surface
b — Length of Cutting Edge Angle
bo — cylindrical margin
b1 — Length of Modified Transition Edge
b2 — Length of Calibration Edge
b3 — Length of End Cutting Edge
αo、αo1、αo2、αo3 — Relief Angle

浮动镗刀片 规格清单
Inserts for Floating Boring Cutter Specification List

刀具直径/mm Cutter Dia./mm	型号 Cutter No.
35-36	XPEA3536
36-37	XPEA3637
37-38	XPEA3738
38-39	XPEA3839
39-40	XPEA3940
40-42	XPEA4042
42-44	XPEA4244
44-46	XPEA4446
46-48	XPEA4648
48-50	XPEA4850
50-53	XPEA5053
53-56	XPEA5356
56-59	XPEA5659
59-62	XPEA5962
62-65	XPEA6265
65-68	XPEA6568
68-71	XPEA6871
71-74	XPEA7174
74-77	XPEA7477
77-80	XPEA7780
80-84	XPEA8084
84-88	XPEA8488
88-92	XPEA8892

刀具直径/mm Cutter Dia./mm	型号 Cutter No.
92-96	XPEA9296
96-100	XPEA96100
100-105	XPEA100105
105-110	XPEA105110
110-115	XPEA110115
115-120	XPEA115120
120-125	XPEA120125
125-130	XPEA125130
130-135	XPEA130135
135-140	XPEA135140
140-145	XPEA140145
145-150	XPEA145150
150-155	XPEA150155
155-160	XPEA155160
160-165	XPEA160165
165-170	XPEA165170
170-175	XPEA170175
175-180	XPEA175180
180-185	XPEA180185
185-190	XPEA185190
190-195	XPEA190195
195-200	XPEA195200

可调机夹浮动镗刀 Adjustable Machine Clip Floating Boring Cutter

适用范围 Application

孔径及深度 大于Φ30mm以上孔，机床行程及刀杆安装空间不干涉的条件下长度不受限制。
Diameter and depth: For holes over Φ30mm, the length is unconstrained if it didn't interfere by machine travel and cutter mounting space.

适用企业 各类通用机械加工企业；军工、航空航天企业；更适用于石油系统深孔加工的企业。
Suitable for enterperises cover various civil machinery processing, defense industry, aeronautical and space, especially for deep hold working in oil system.

适用机床 深孔钻镗床、镗床、车床改装及加工中心等机床。
Applicable for deep hole drilling and boring machine, boring lathe, lathe modification, working center etc.

冷却条件 实现内冷、油冷更好。
Cooling condition: Internal cooling, better for oil cooling.

适用材料 各种钢材；铸铁；更适用于石油系统难加工材料，如：不锈钢，钛钢等。
Suitable for kinds of steel and cast iron, better for hard working material which used for petroleum system such as stainless steel, titanium steel, etc.

切削用量的选用 Selection of Cutting Parameter

Vc — 切削速度：影响加工效果及刀片寿命的主要因素，应根据实际情况而定。
Vc — Cutting Speed: Main factor on cutting result and insert lifetime. It shall be demermined as actual situation.

切削速度Vc推荐表 Vc Recommendation List

材料 Material		切削速度 Vc=m/min
名称 Name	硬度 HB	
碳钢 Carbon Steel	125-190	40 – 102
低碳钢 Mild Steel	200	50 – 110
铸铁 Cast Iron	160-250	40 – 110
铝 Aluminium	60-100	60 – 120
不锈钢 Stainless Steel		40 – 77
钛合金 Titanium Alloy		40 – 75

0 10 20 30 40 50 60 70 80 90 100 110 120 130 140 150

f — 进给量：影响加工表面质量的重要因素，加工常用材料建议选用f=28~40mm/min。
f — Feed: Main factor on surface quality. Recommend f=28~40mm/min for common material.

ap — 切削深度：直径方向取0.5~0.7mm（2ap）
ap — Deep: Dia. Shall be 0.5~0.7mm（2ap）

深孔加工 Deep Hole Boring

可调机夹浮动镗刀 Adjustable Machine Clip Floating Boring Cutter

加工效果 Processing Result

1. 尺寸精度稳定在H8，可达到H7，镗孔两端直径差每1500mm长度上可控制在0.01mm。
   Dimension precision is between H7~H8. Diameter tolerance between two hole ends will be at 0.01mm for each 1500 mm.
2. 孔表面粗糙度稳定在Ra1.6，不锈钢及钛合金可达到Ra0.8、Ra0.4。
   Roughness on hole surface will be at Ra1.6, for stainless steel and titanium alloy will be at Ra0.8 & Ra0.4.
3. 孔表面平整，均匀。
   Hole surface smooth and uniform.
4. 适用批量生产，更适合大批量生产。
   Nice for vast quantity production, and better for mass production.

刀具寿命 Life service

1. 连续切削时每个刀片的寿命可达到25m以上。
   Each insert can work over 25m during continuous cutting.
2. 刀夹的使用寿命为原焊接式刀夹的10倍以上。
   Lifetime of cartridge will be 10 times for as per welding type one.

非标定制 For cutters to be customized

1. 可定制非标尺寸的刀具，需提供以下信息：
   For customized tools, following information will be necessary:
   1）被加工零件的材料及热处理状态。
   workpiece material and heat treatment status;
   2）被加工零件的孔径尺寸及公差。
   Dia. and tolerance for workpiece hole;
   3）根据客户现有刀具定制浮动镗刀时，需提供刀夹的宽度和高度尺寸。
   Width and height of cartridge shall be provided for current tools;
   4）刀杆螺纹连接尺寸及总长度。
   Thread connection dimension and total length of cutter are required.
2. 您所订购的非标刀具在发货前，根据孔径的要求，将调整至适合加工状态。
   All customized tools will be adjusted to a suitable status as your requirement of hole diameter.

加工状态示意图 Processing State Diagram

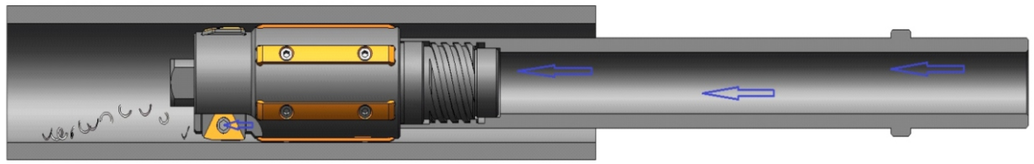

深孔加工 Deep Hole Boring

可调机夹浮动镗刀 Adjustable Machine Clip Floating Boring Cutter

加工案例 Manufacture Instance

工件 Workpiece	材料 Material		TC11 钛钢 Titanium Alloy	不锈钢 Stainless Steel
	尺寸公差 Tolerance		$69.86^{+0.1}_{0}$	$69.60^{+0.1}_{0}$
	长 度 Length		1200	1200
	孔表面粗糙度 Hole Surface finish		Ra1.6	Ra1.6
刀具 Tool	实际尺寸 Actual Dimension		69.9	69.68
实选参数 Actual Cutting parameter	切削速度 Cutting Speed	Vc=m/min	47.87	47.72
	切削厚度 Depth of Cut	ap=mm	0.7	0.7
	进给量 Feed Rate	F=mm/min	30mm	30mm
结果 Result	孔径 Diameter		69.89	69.67
	两端直径差 Dia. Tolerance between two ends		0.008	0.007
	表面粗糙度 Surface Finish		Ra0.8	Ra0.8

实物照片 Physical Photos

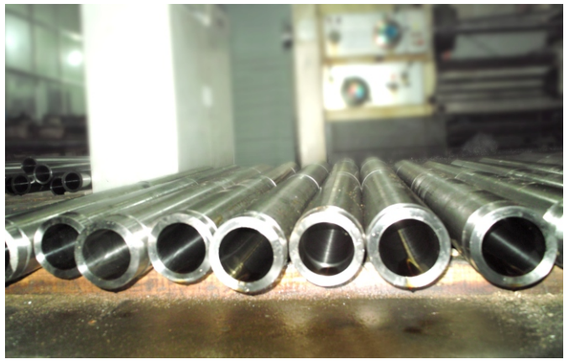

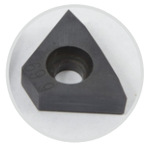

让深孔加工变得轻松

Provide You Easier Cutting